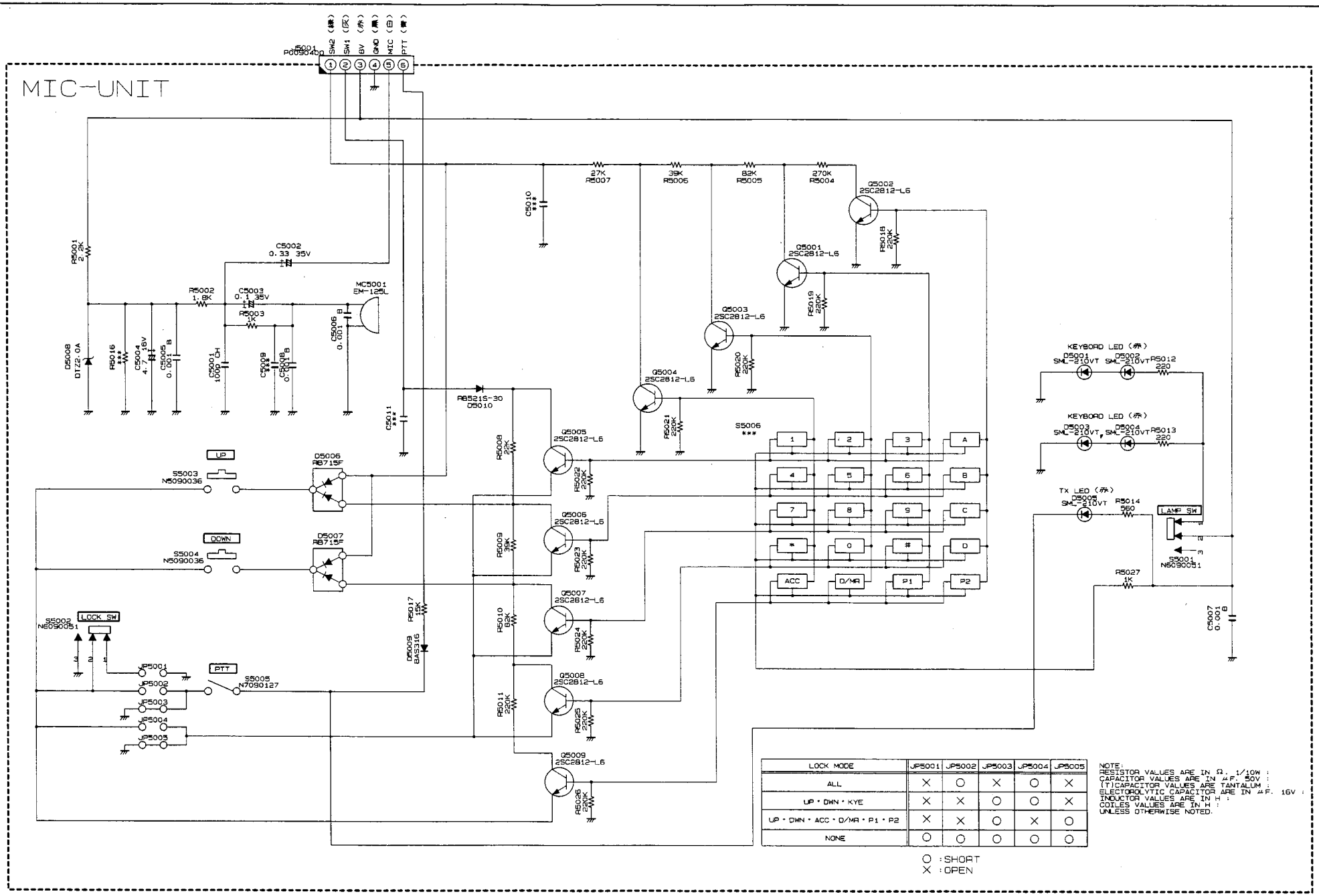

LOCK MODE	JP5001	JP5002	JP5003	JP5004	JP5005
ALL	×	○	×	○	×
UP・DWN・KYE	×	×	○	○	×
UP・DWN・ACC・D/MR・P1・P2	×	×	○	×	○
NONE	○	○	○	○	○

○ :SHORT
× :OPEN

NOTE:
RESISTOR VALUES ARE IN Ω. 1/10W :
CAPACITOR VALUES ARE IN μF. 50V :
(T)CAPACITOR VALUES ARE TANTALUM :
ELECTOROLYTIC CAPACITOR ARE IN μF. 16V :
INDUCTOR VALUES ARE IN H :
COILES VALUES ARE IN H :
UNLESS OTHERWISE NOTED.

CIRCUIT DIAGRAM	MODEL MH-48
DES. B-AAA43X000/MIC-UNIT	
REF. BP0066500A.cir/001.sht	EDITION
DATE 28 JUL.・1999	UPDATE 09 DEC.・1999
VERTEX STANDARD CO.・LTD.	

yaesu1 1901.10.04 11:46